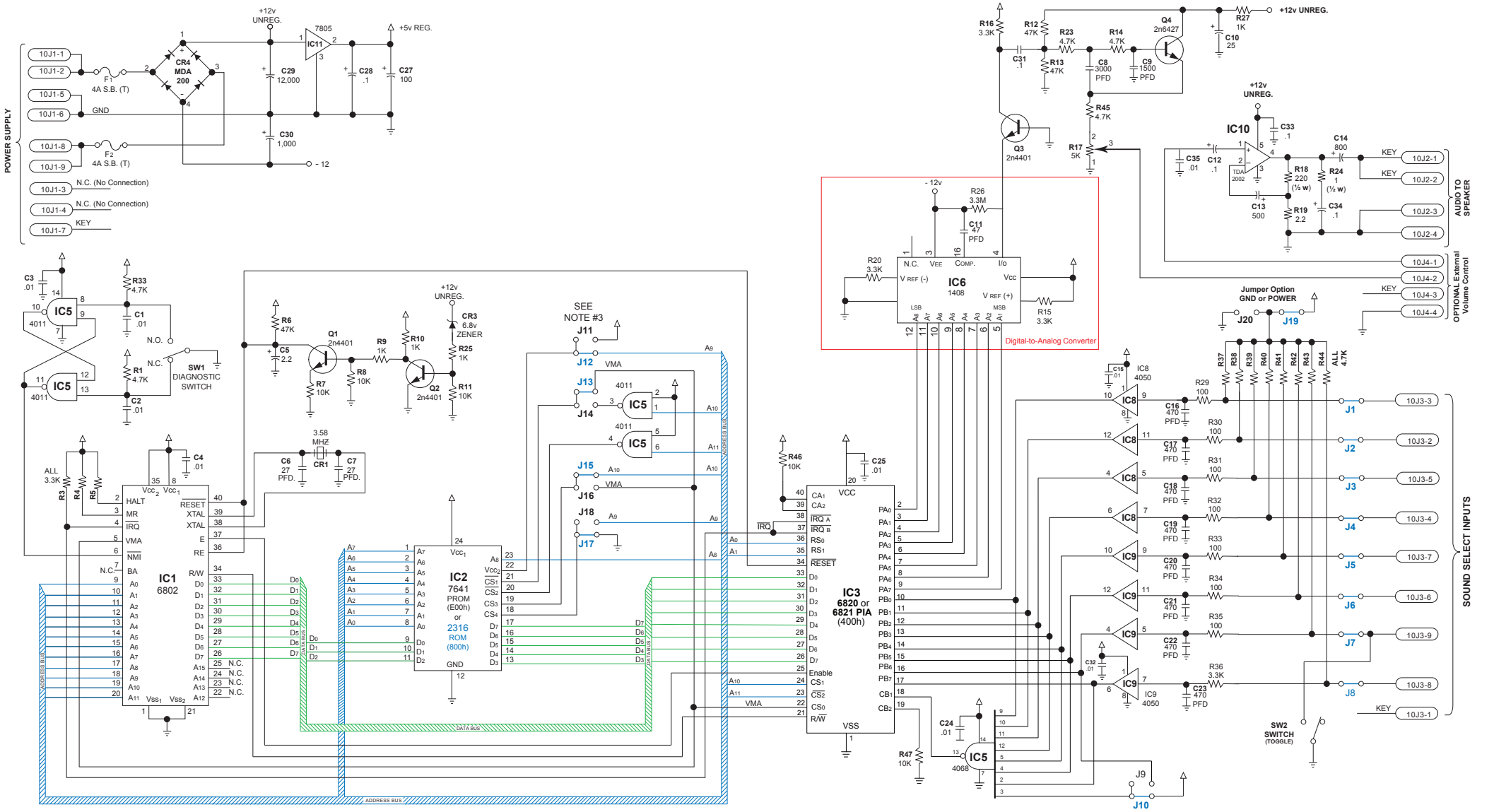

Notes:

Unless otherwise Specified
1. All Resistor values given in ohms and ¼ watt.
2. All Capacitor values given in microfarads.

Switch Settings:
SW1- Diagnsotic Pushbutton
SW2- **Selects Synth Sounds (N.C.)** or Chime Notes (10J3-9 to Gnd)

Jumper Settings:
7641 PROM (512 bytes) at IC2: J11, J14, J16 and J18 are connected.
2316 ROM (2048 bytes) at IC2: J12, J13, J15 and J17 are connected.
Settings shown for 2316 masked ROM, or 2716 EPROM at IC2.

Hum can be reduced by replacing R18 (220) with 100Ω ½ watt value.

Sys 3 & 4 Sound Board Logic Drawing
Board Type 1
(Flash, Time Warp, Stellar Wars, Laser Ball, Scorpion and Algar)

ISSUE NUMBER 1.2 (29 DEC 2008)
CREATED BY: Richard Harvey
and Phil Butcher

www.firepowerpinball.com